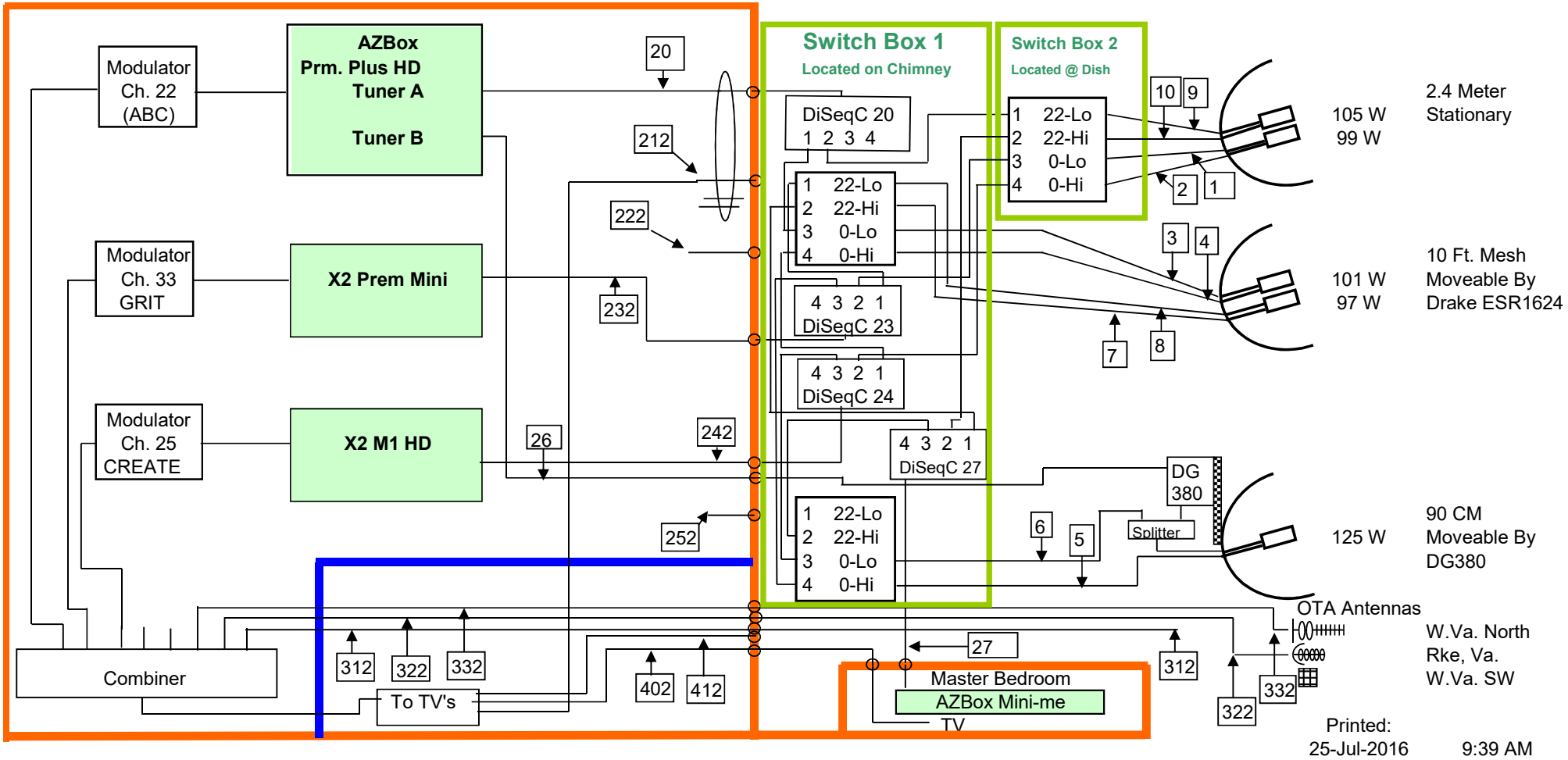

Modified Mar. 2016